DIAMOND
Fiber Optic Components

NETWORK ACCESSORIES

OAF E-2000™

SINGLE MODE PC
SINGLE MODE APC

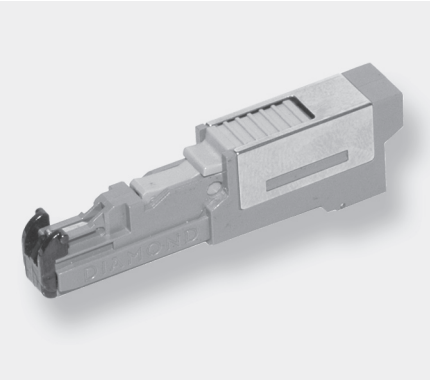

DESCRIPTION

Attenuators are used to adapt the transmitted light power to the characteristics of the implanted receiver.
The OAF E-2000™ in-line fixed attenuator provide a precise and repeatable amount of light loss (attenuation) via a doped fiber. This results in wavelength independent and stable attenuation values for typical wavelength bands used in telecommunication applications (1260-1360 and 1460-1580 nm). Further more, the OAF E-2000™ brings all the features of the E-2000™ connector system.
They are available for SM PC and APC applications, and are fully compatible with all LSH/LSH-APC connectors and adapters.

FEATURES AND BENEFITS

- Precise attenuation (± 10% tolerance)
- Suitable for optical power up to +20dBm.
- Removable keyed ferrule
  - *Easy and reliable cleaning operation.*
  - *Ensure precise, repeatable attenuation and extended life for fiber front face.*
- Injection moulded housing (UL 94 V0 flammability rating)
  - *Durable and economical construction.*
  - *Connector housing protects and precisely guides the attenuated ferrule and the alignment sleeve.*
- Positive locking mechanism with interchangeable color coded thumb-latch
  - *Prevents undesired removal of the attenuator, when disengaging the interfaced connector.*
  - *Eliminated need to grasp around connector body when demating, enabling higher packing density.*
- Spring-loaded shutter and spring-loaded protective cap
  - *Automatically protects ferrule and sleeve.*
  - *Protect personnel from eye-damaging laser radiation.*

SPECIFICATIONS

	SINGLEMODE 0° PC						SINGLE MODE 8° APC			UNITS
Fiber	9/125									µm
Wavelengths	1260-1360 and 1460-1580									nm
Nominal attenuation Tolerance*	2 ±0.5	4 ±0.5	5 ±0.5	6 ±0.5	10 ±1	15 ±1.5	20 ±2	25 ±2.5	30 ±2.5	dB dB
Repeatability	<0.5 over service life									dB
Service life	1000 matings (According to field experience)									
Return loss	>45						>65			dB
Temperature range	-25/+70									°C

* Values measured using 1310 or 1550 nm LED source. Additional IL induced by modal noise 0,05 dB/dB.
The excess attenuation due to the 2 connections may be as high as 0.5 dB max.

DIAMOND
the fiber meeting

DIAMOND SA • Via dei Patrizi 5 • CH-6616 Losone
Tel. +41 91 785 45 45 • Fax +41 91 785 45 00 • e-mail info@diamond-fo.com
www.diamond-fo.com

Specifications subject to change without notice

BDD 1950109 *048*

TYPES AND DIMENSIONS

OAF E-2000™ SM

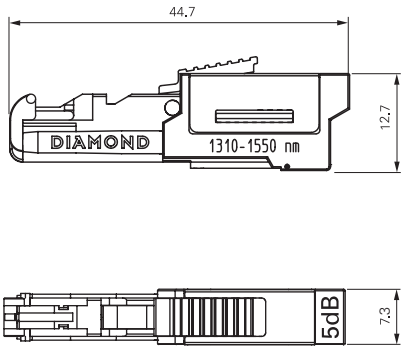

Available types:	**OAF E-2000™ PC SM** **OAF E-2000™ APC SM**
Ferrule type:	Standard ø2.5 mm Zirconia/metal insert
Alignment sleeve:	Zirconia
External parts:	Standard blue plastic housing and latch for PC, and green for APC version.

Other latch colors available upon request. (Please refer to the part-specific color coding of E-2000™ Simplex datasheet).

CLEANING PROCEDURE

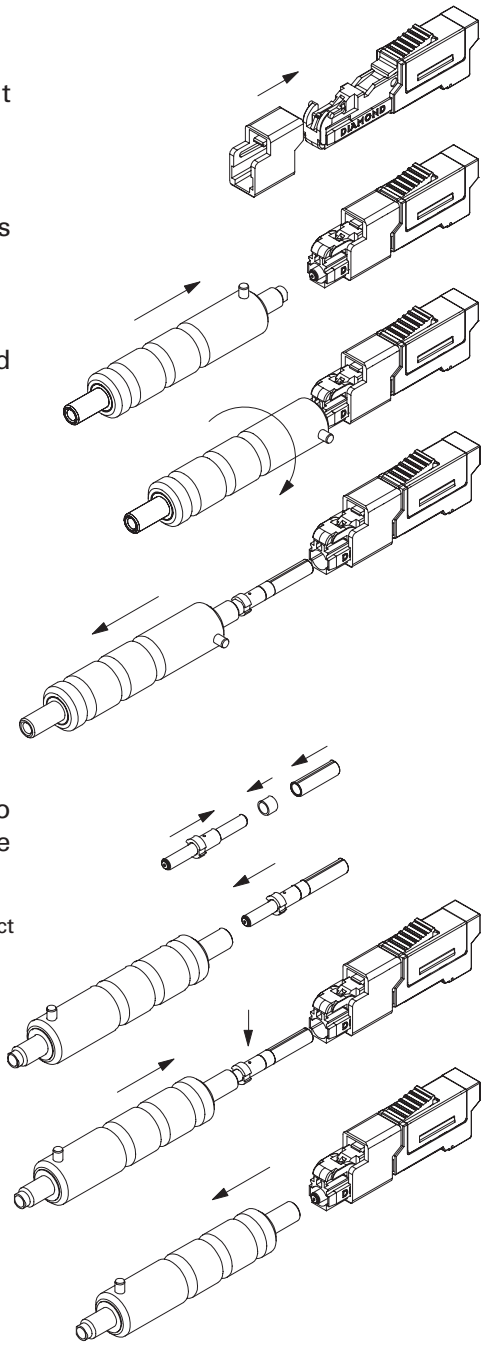

- Slide the service adapter over the front part of the attenuator, until it locks (audible click).
- Position the handling tool over the ferrule and turn it for 90 degrees clockwise until it disengages the ferrule.
- Pull the ferrule from the body and remove the alignment sleeve and spacer.
- Proceed to clean both front faces as described in our cleaning procedure.

  DIAMOND offers a cleaning set containing alla necessary tools and a 300x microscope for visual inspection.
- To assemble the „attenuated ferrule", proceed as follows:
  Replace the spacer and the alignment sleeve onto the ferrule.
  Insert the „attenuator ferrule" into the handling tool and position it into the attenuator body. Push the „attenuated ferrule" until it locks into the body.

  NOTE For 8 degree APC, align mark with latch mechanism to ensure proper APC contact with interfacing fiber.
- Remove the handling tool.
- Remove the service adapter.

Cleaning tools:
- Service adapter
- Handling tool
- Cleaning set

ORDER INFORMATION

To order OAF E-2000™ and cleaning tools, please refer to the part numbers provided in the enclosed P/N list.

Other versions, as well as attenuation values and fiber types available upon request.